Tuesday, August 24, 2004
File location: C:\Documents and Settings\Labview\ourvi

CV Measurement

1. Connect the LCR meter terminals to the HV box
2. Connect HV cable
3. LCR meter corrections:
    - Set corrections OFF
    - Perform OPEN corrections
    - Set OPEN on
    - Short the inputs
    - Perform SHORT corrections
    - Set SHORT on
    - Remove Short
4. Use the program **cv_bnl:**

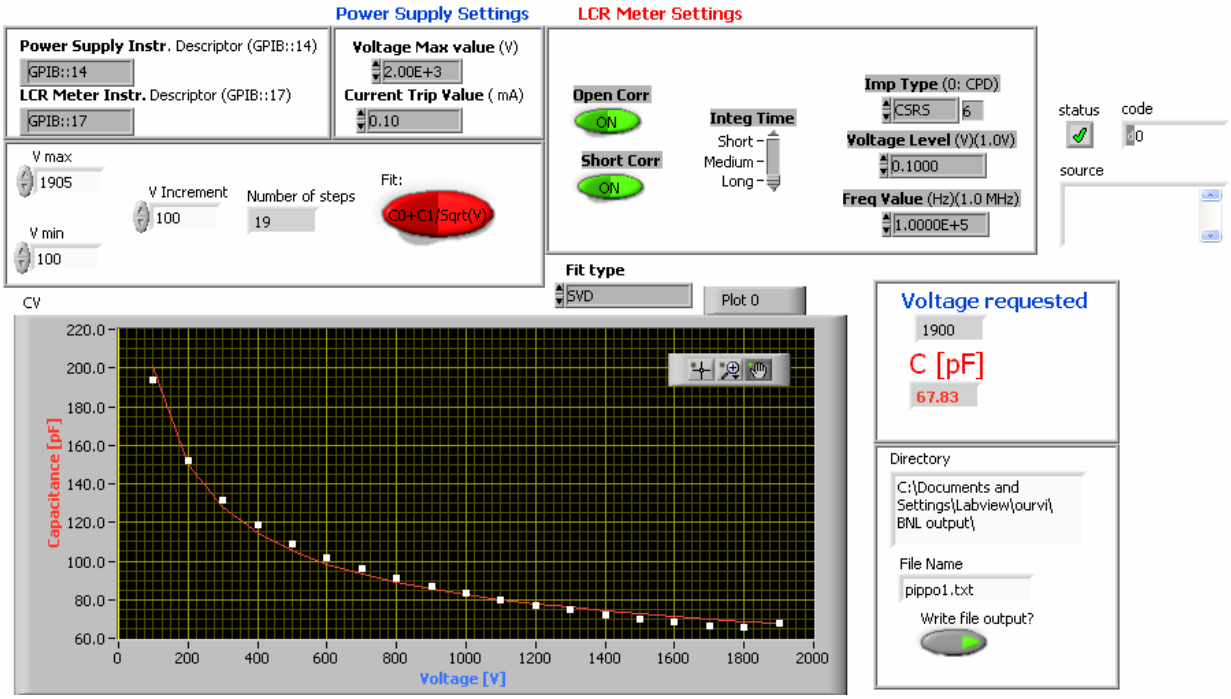

HV Box

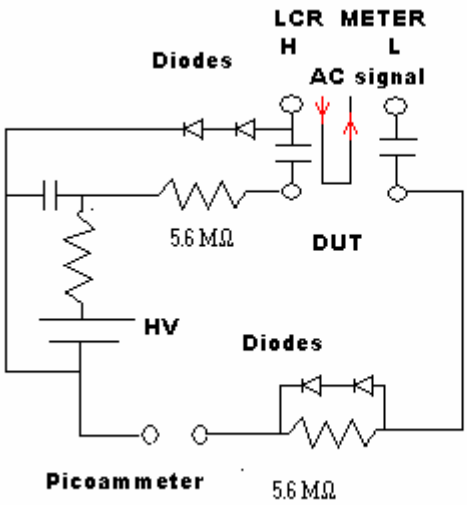

The HV box is meant to provide HV to the diode while protecting the LCR meter from the external power supply. This box is designed so that:

1. The leakage current can only flow through the picoammeter, no other path is allowed
2. The sinusoidal signal sourced by the LCR meter goes in the DUT and then is sank by LCR
3. The operation of the LCR meter and picommeter are decoupled, they can both be present without interfering with each other

To achieve this result the circuit is the following:

1. The HV side of the Device Under Test (DUT) is coupled via a blocking capacitor to the H connector of the LCR meter
1. Two diodes prevent the H connector to go above ~ 1 Volt
2. The signal sourced by the H connector goes to the L connector. A large resistance prevent this signal to be sank by the power supply ground
3. Two diodes prevent the L connector to go above ~ 1 Volt
4. The L connector needs to be decoupled via a capacitor (not HV cap) so that the leakage current of the DUT will flow in the circuit and not in the LCR meter

IV Measurement

1. Connect the Picoammeter to the terminal in the box. For correct pedestal it should be on for at least an hour
2. Connect HV cable
3. Connect the diode in front of the APD
4. Use the program **IV_bnl:**
    a) run it without light (LED PS off)
    b) run it with light (LED PS on)

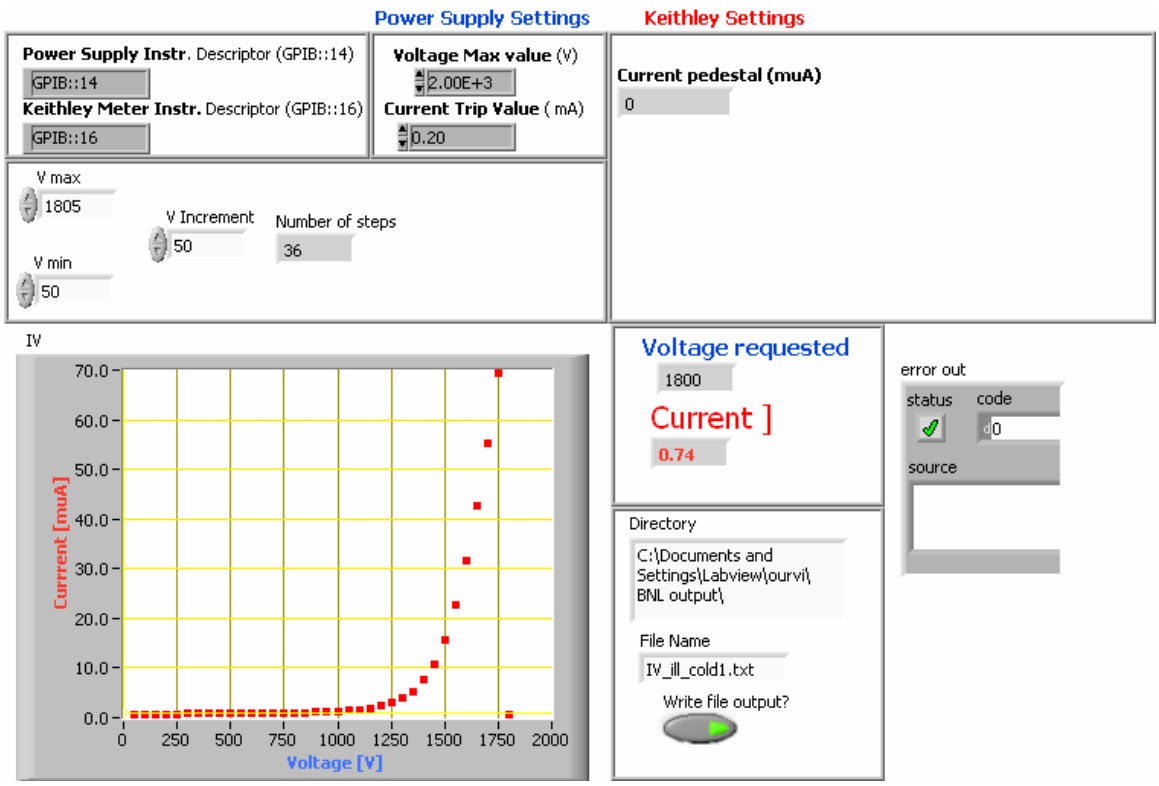

Low current values (below 1 μA) are not real, limited by the Keithley 2000 Precision.

Gain Measurement

1. Use the program IV_readback
2. Select an illuminated and a dark IV
3. Run the program

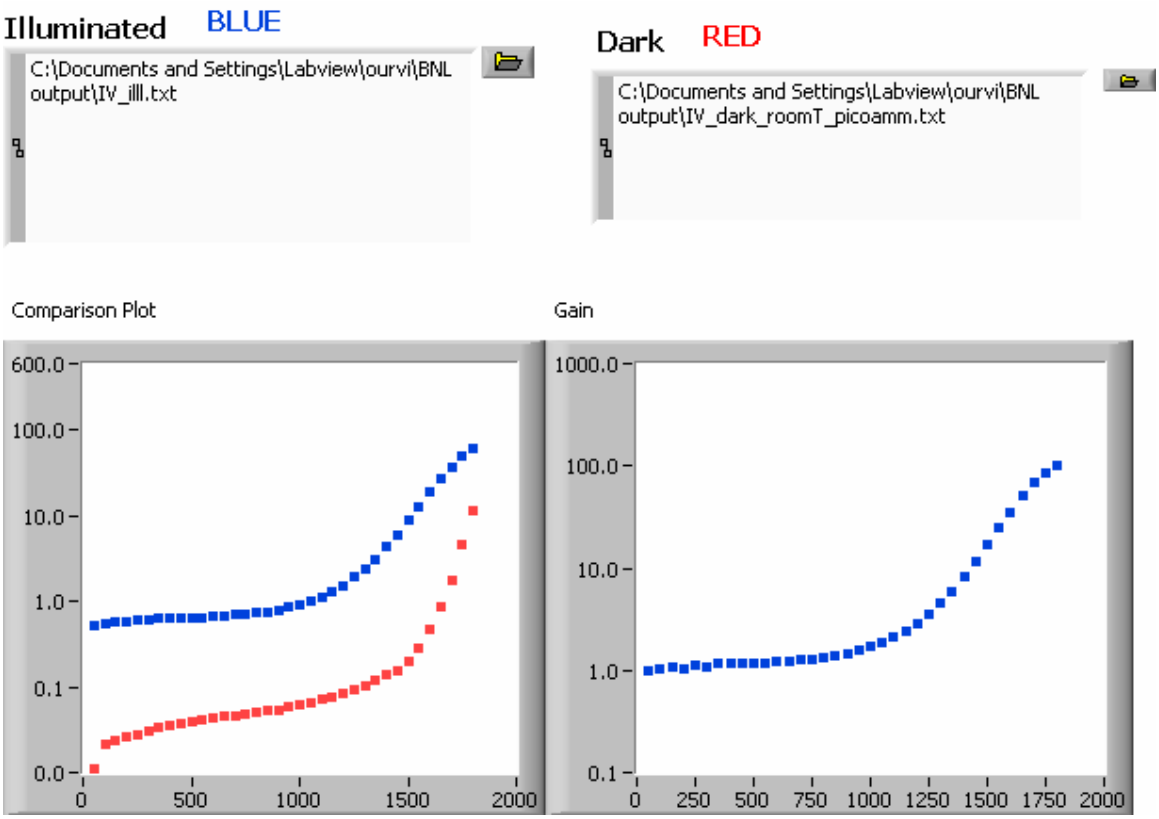

Leakage current at Room T measure with a picoammeter (by hand!!!) so this is a correct IV even for the dark current.

This shows that our set-up can measure down to ~ 10 nA without problem

GAIN results
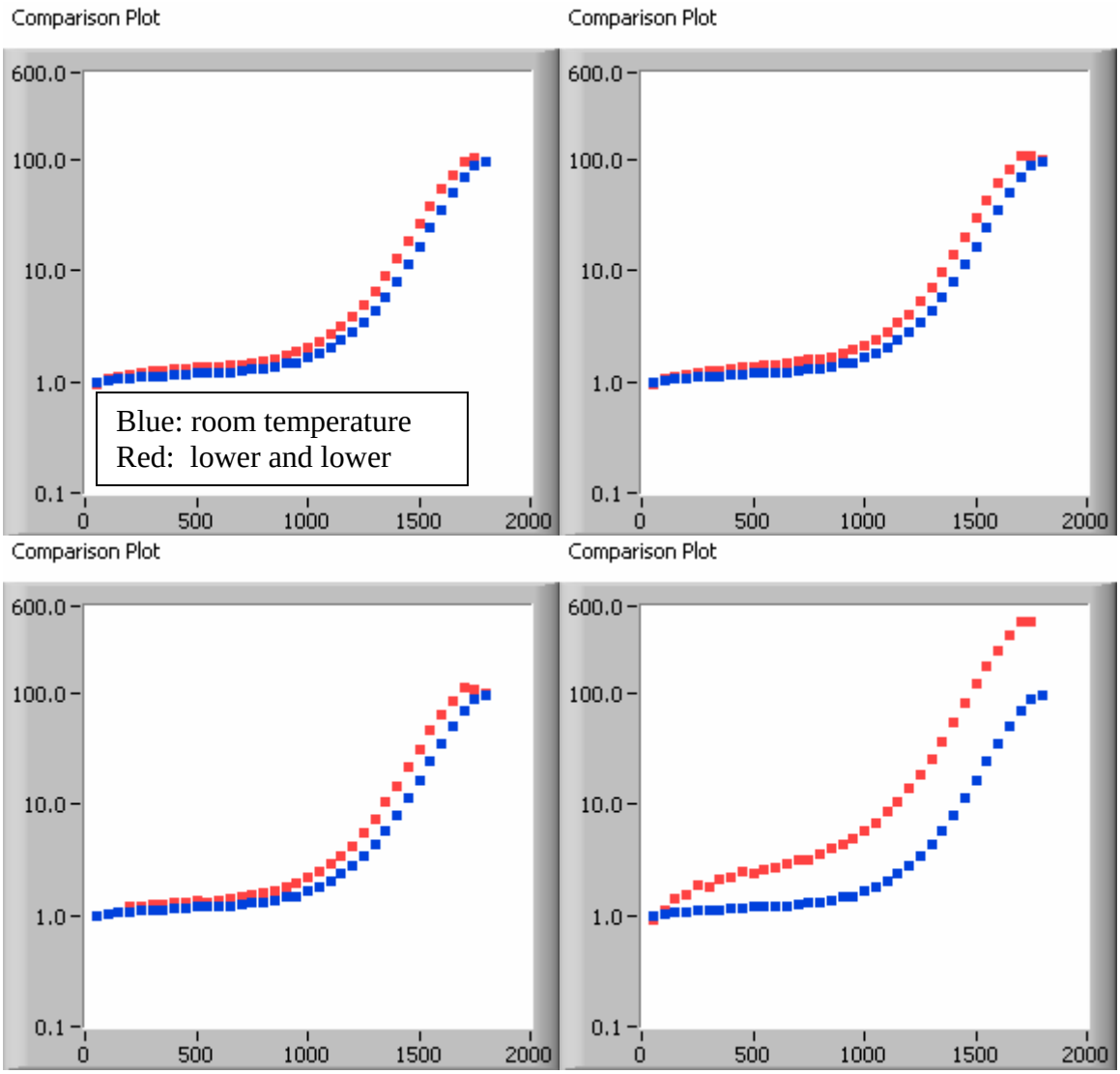
Some gain measurements: